INSTRUCTIONS

FAST® LSX$_{HR}$™ 102mm Intake Manifold

FAST® LSX$_{HR}$™ COMPLETE PART NUMBERS	
P/N	DESCRIPTION
146303	LS1 LSXHR WITH LONG RUNNERS
146106	LS3 LSX$_{HR}$ WITH LONG RUNNERS
146204	LS7 LSX$_{HR}$ WITH LONG RUNNERS

Thank you for choosing FAST™ products; we are proud to be your manufacturer of choice. Please read this instruction sheet carefully before beginning installation, and also take a moment to review the included limited warranty information. Contact us toll free at 1.877.334.8355 or at www.fuelairspark.com under Tech Help with any questions.

FAST®
3400 Democrat Rd.
Memphis, TN 38118
Phone: (901) 260-3278 Fax: (901) 375-3408
www.fuelairspark.com

Part #FAST4-298
Revised 1/26/21

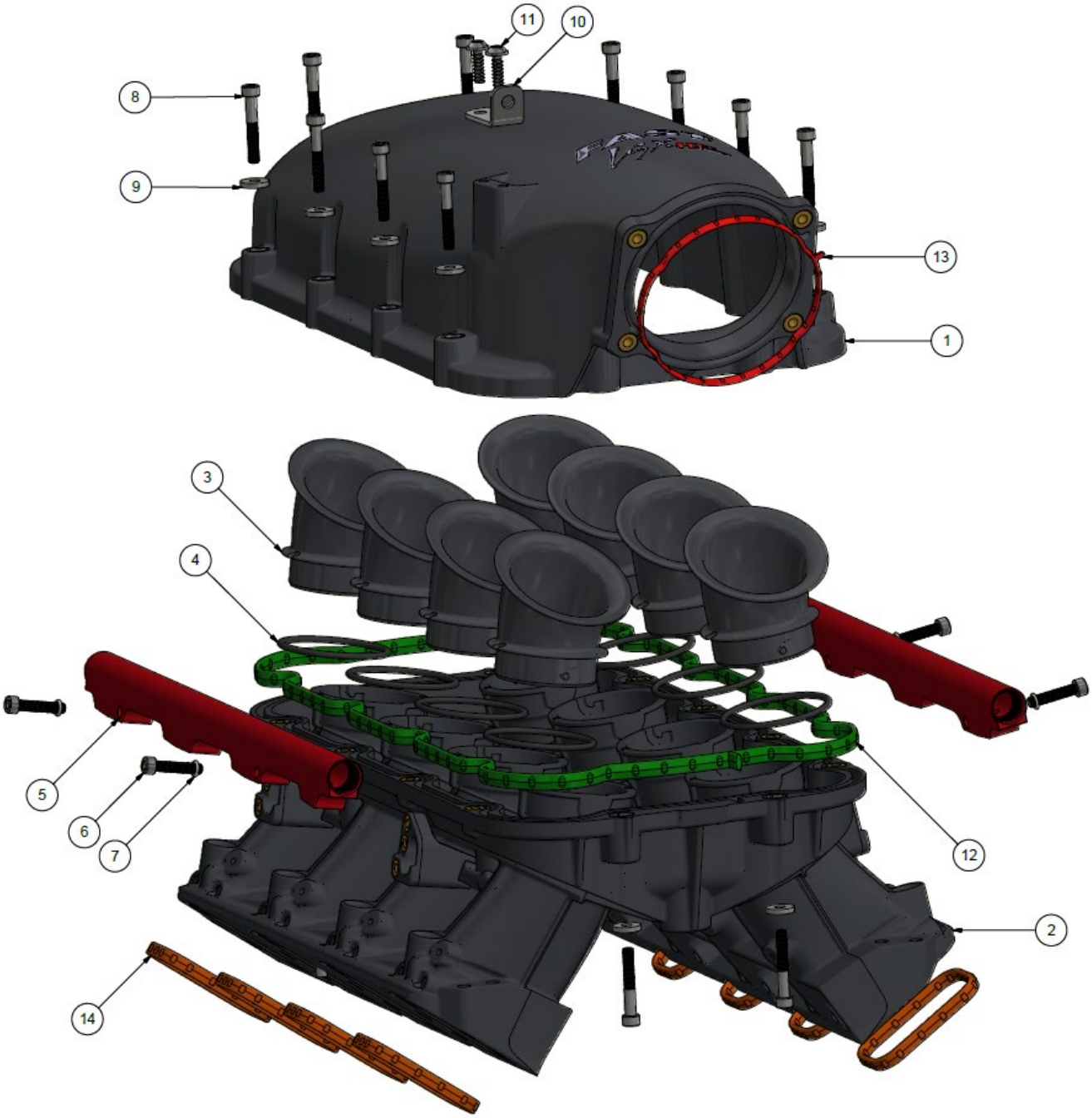

Figure 1 - Exploded View

Table 1 - Exploded View Identifier

FAST® LSX$_{HR}$™ COMPONENT PART NUMBERS			
ITEM	P/N	DESCRIPTION	QTY
1	146079	UPPER SHELL	1
2	146109	LS3 LOWER SHELL	1
	146207	LS7 LOWER SHELL	
3	146072-8	LONG RUNNERS	1
	146073-8	MEDIUM RUNNERS	
	146074-8	SHORT RUNNERS	
4	146076	O-RING, RUNNER	8
5	146036FR (LS3/LS7) 146037FR (LS1)	FUEL RAIL	2
8		PLENUM BOLT (M6 X 40mm)	12
9		PLENUM WAHSER (M6)	12
N/A	146077	LS1/LS3 INTAKE BOLTS (M6 X 60mm)	10
N/A	146078	LS7 INTAKE BOLTS (M6 X 50mm)	10
11	146077 & 146078	THROTTLE BRACKET SCREWS (M6 X 20mm)	2
N/A		INTAKE BOLT WASHERS (M6)	10
		3/8 NPT TO 1/2" BARBED ELBOW	1
		1/4 NPT TO 1/4" BARB	1
		1/4 NPT TO 5/16" BARB	1
		1/4 NPT TO 3/8" BARB	1
		MAP SENSOR SCREW	1
		THROTTLE BODY BOLT (M6 X 40mm)	4
		THROTTLE BODY WASHER (M6)	4
6		FUEL RAIL BOLT (M6 X 30mm)	4
7		FUEL RAIL WASHER (M6)	4
10		THROTTLE BRACKET	1
N/A	FAST4-298	INSTRUCTIONS, FAST LSXHR	1
12	146080	PLENUM SEAL	1
13	146081	THROTTLE BODY SEAL	1
14	146003-8	RUNNER TO HEAD SEALS	8

Stock Manifold Disassembly:

1) Allow engine to cool, disconnect the negative battery cable and remove coil pack (beauty) covers, if applicable. Relieve fuel pressure by depressing the Schrader valve on the end of the rail. Cover with a towel to absorb lost fuel.

2) Clean off any excess dirt and debris around the intake manifold that could become dislodged and fall into your engine during removal.

3) Disconnect fuel line from rail by using quick-connect separator tool (J37088-A). Place shop towels around connection to catch additional fuel.

4) Unplug Mass Air Flow (MAF) and Manifold Absolute Pressure (MAP) connectors and remove air cleaner assembly.

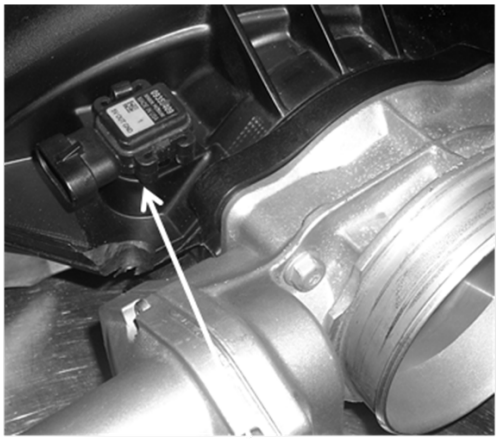

MAP Sensor

5) Disconnect any PCV hoses or vacuum lines on the intake manifold, including the brake booster hose. Take note of positions for reinstallation.

6) Disconnect the electronic throttle body connector.

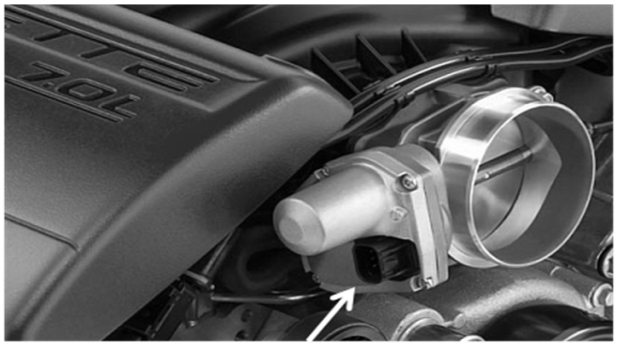

Electronic Throttle Body

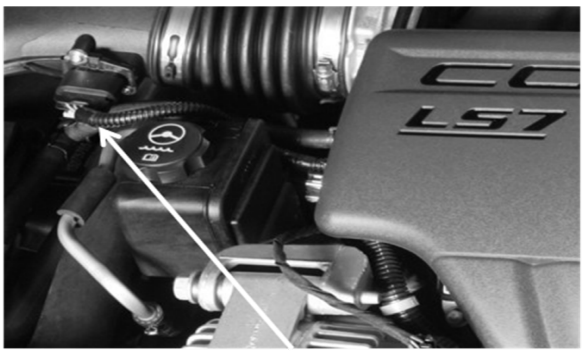

MAF Sensor

7) Unplug all eight (8) fuel injectors from the harness.

8) Loosen all ten (10) intake manifold bolts (8mm hex).

9) The stock manifold is ready to be removed. Carefully lift the manifold and remove.

10) Clean any remaining dirt and debris that may dislodge and enter the engine.

11) Cover the open cylinder head ports with a clean, lint-free rag to prevent anything from entering your engine.

12) Remove the four (4) fuel rail mounting bolts and remove the stock fuel rail and injectors as an assembly.

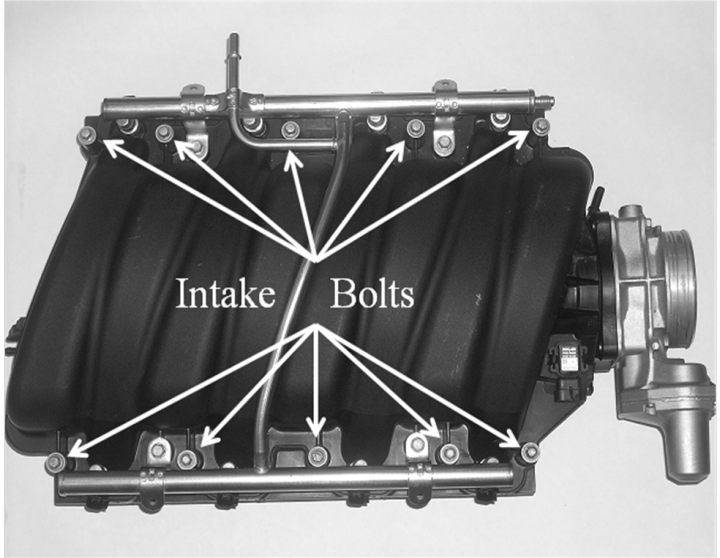

13) Remove injector clips using a screw driver to gently pry them off.

14) Remove injectors from the fuel rail, remembering that the fuel rail is still full of fuel. Take precautions to contain the excess fuel that will leak out. Rubber gloves and safety glasses are required.

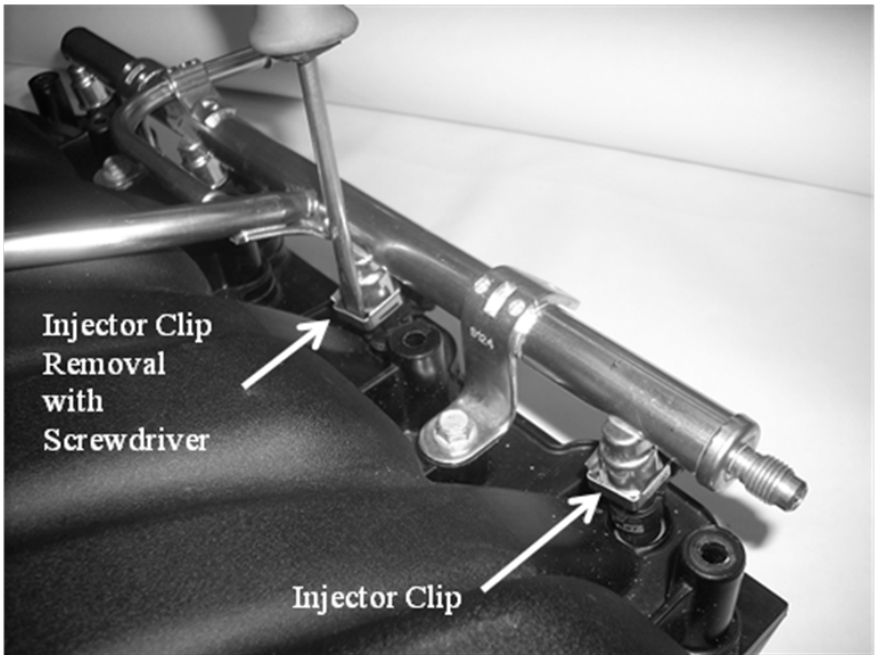

Required Modifications:

1) Coolant crossover lines modification and/or replacement may be required depending on application. Use GM Part #12602544 front only crossover, and two (2) of Part #12602540 plugs if needed.

2) Remove the upper shell from the manifold. Due to the wide range of applications the LSX_{HR}™ was designed to fit, the MAP sensor locations require drilling. There are two locations provided. Both are intentionally shipped undrilled. Use a 3/8" drill bit to open your chosen MAP sensor location (see diagram below). It may be necessary to remove the runner velocity stacks if your manifold is equipped with the long runners (see section titled "Runner velocity stacks").

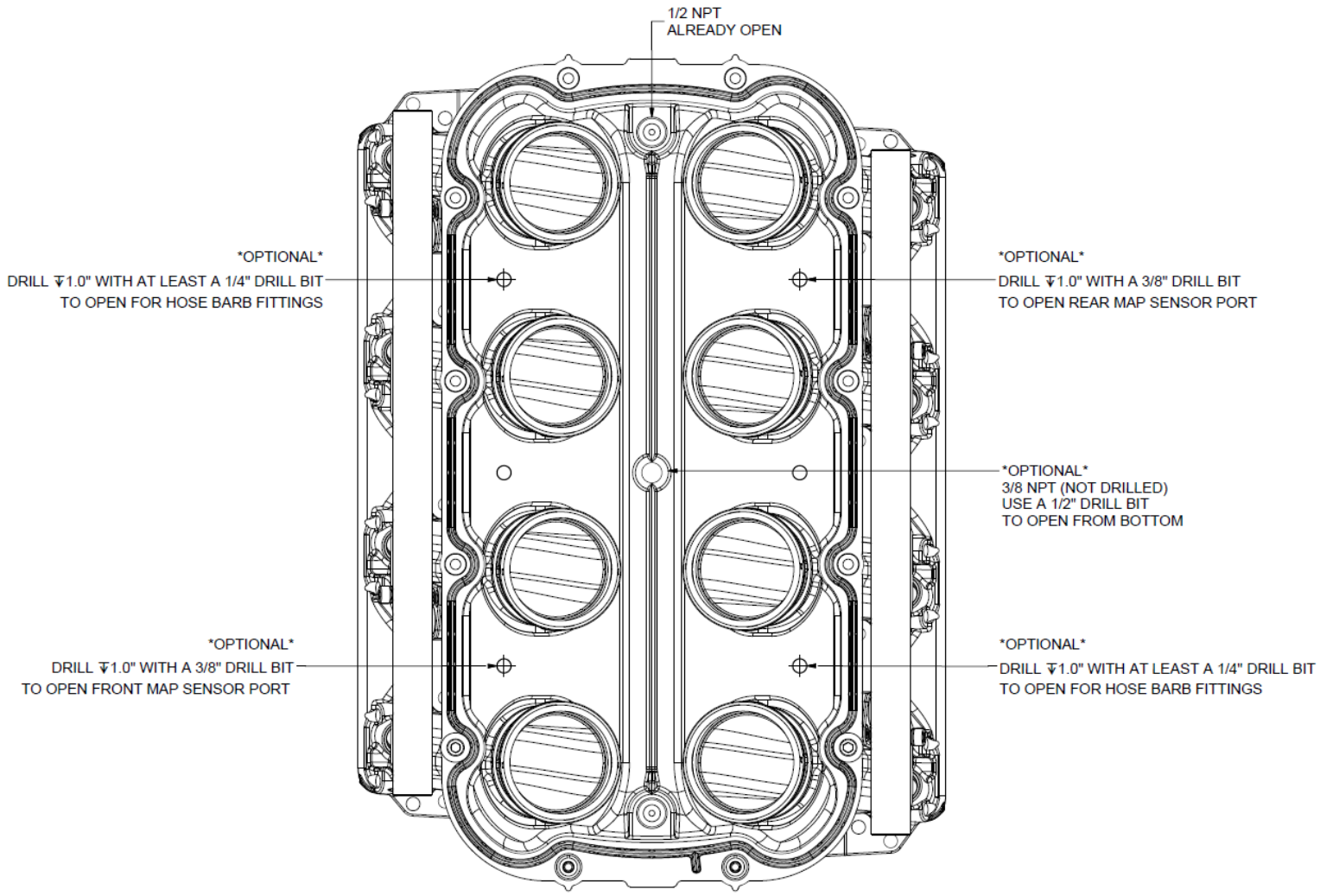

3) There are two different MAP sensors that can be used. If your MAP sensor is O-ring style, you must drill out your desired MAP sensor location with a 15/32" drill bit. If your MAP sensor is a grommet style, no extra drilling is required.

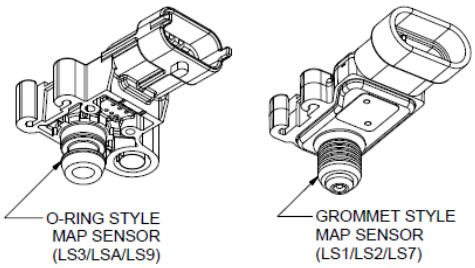

4) The LSX_{HR}™ incorporates four optional vacuum ports in addition to the two dedicated MAP sensor ports.
   a) A 1/2 NPT port at the rear that is already open.
   b) A 3/8 NPT port in the center of the manifold base that is shipped sealed.
   c) Two ¼ NPT ports at the front and rear of the runner banks that are shipped sealed.
   d) MAP sensor ports are located at the rear of the driver's side bank and the front of the passenger side bank.

Refer to the diagram below and on the previous page for locations and how to open for use.

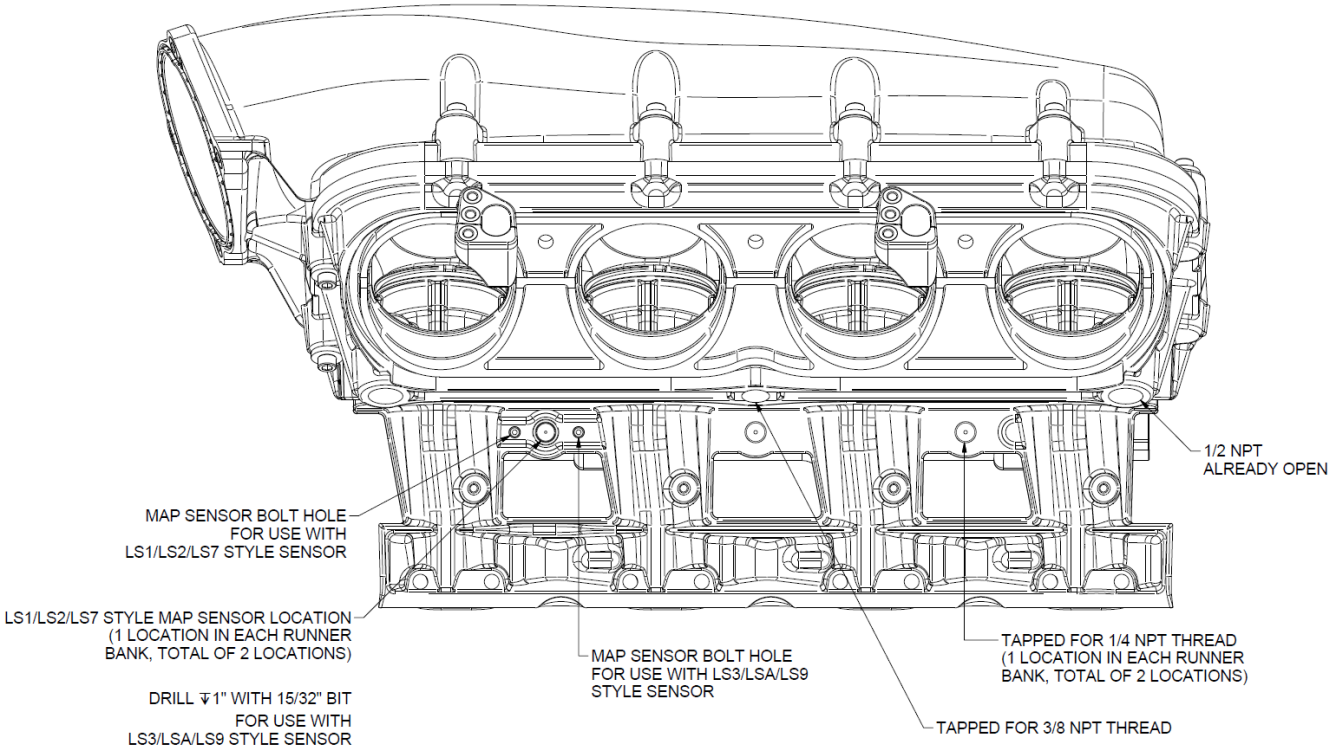

5) After drilling all desired vacuum port locations from the top, thoroughly remove any leftover shavings from the manifold.

6) Install all desired vacuum fittings and the MAP sensor at this time.

Runner Velocity stacks:

1) The LSX_{HR}™ is designed with removable runner velocity stacks to provide optional tuning via changes in runner length. The runner velocity stacks are held in place with a twist-lock design and an O-ring.

2) In order to remove the runner velocity stacks, remove the O-ring, press down on the runner velocity stack, and twist counter-clockwise to release the locking mechanism. Follow the diagrams below for further help.

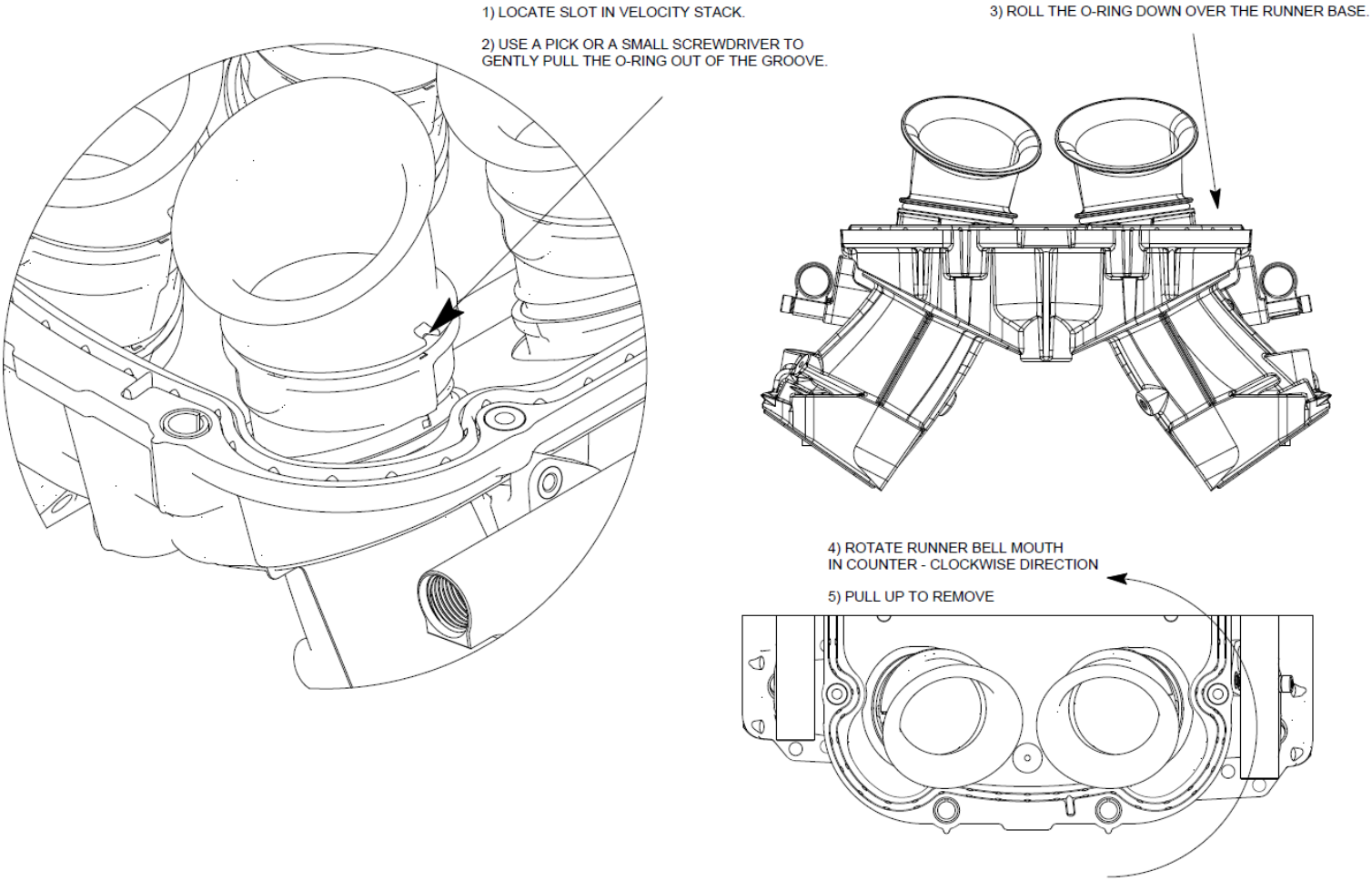

3) Installation of the runner velocity stacks is simply the reverse of the removal process.
    1) Be sure that the O-ring is pre-installed onto the runner base.
    2) Align the locking tangs on the runner velocity stack with the corresponding grooves in the manifold base.
    3) Press down on the runner velocity stack
    4) Rotate the runner velocity stack in a clockwise direction to lock the runner in place.
    5) While pulling up on the velocity stack, roll the O-ring up over the runner base and into the groove
    6) Press firmly into the retaining groove 360° around the velocity stack. Verify no part of the O-ring is protruding out.

4) Different velocity stacks are available from FAST via the following part numbers.

P/N	DESCRIPTION	TOTAL RUNNER LENGTH
146072-8	LONG RUNNERS (AS SHIPPED)	8.50
146073-8	MEDIUM RUNNERS	8.15
146074-8	SHORT RUNNERS	6.96”

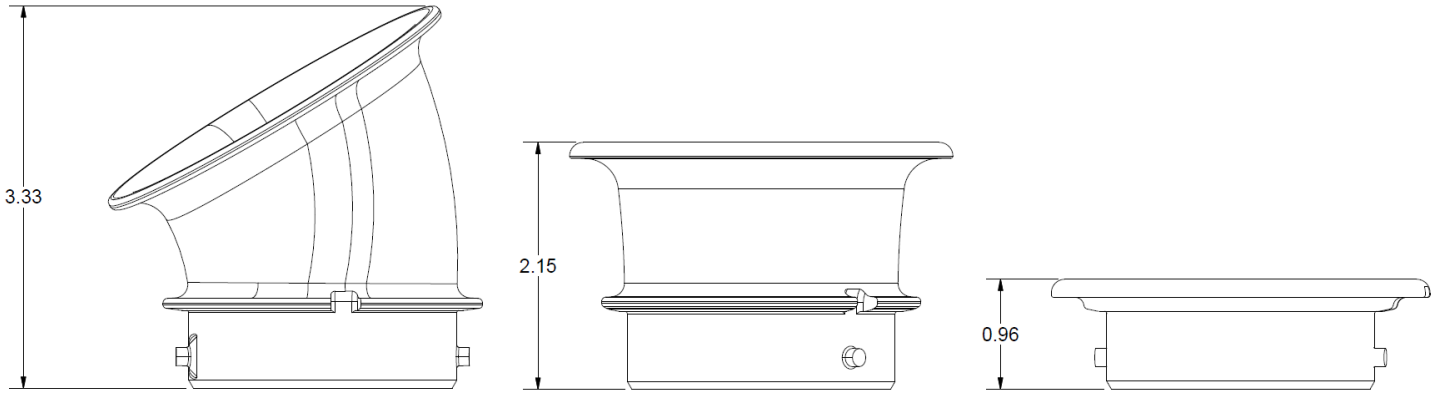

146072 146073 146074

Installation:

1) The LSX$_{HR}$™ is ready for installation once the desired vacuum ports have been opened and the runner changes (if desired) have been made.

2) Begin by replacing the upper shell and torque all 12 bolts to 45 in-lbs on the first pass, then to 75 in-lbs on the second pass. Follow the torque sequence below.

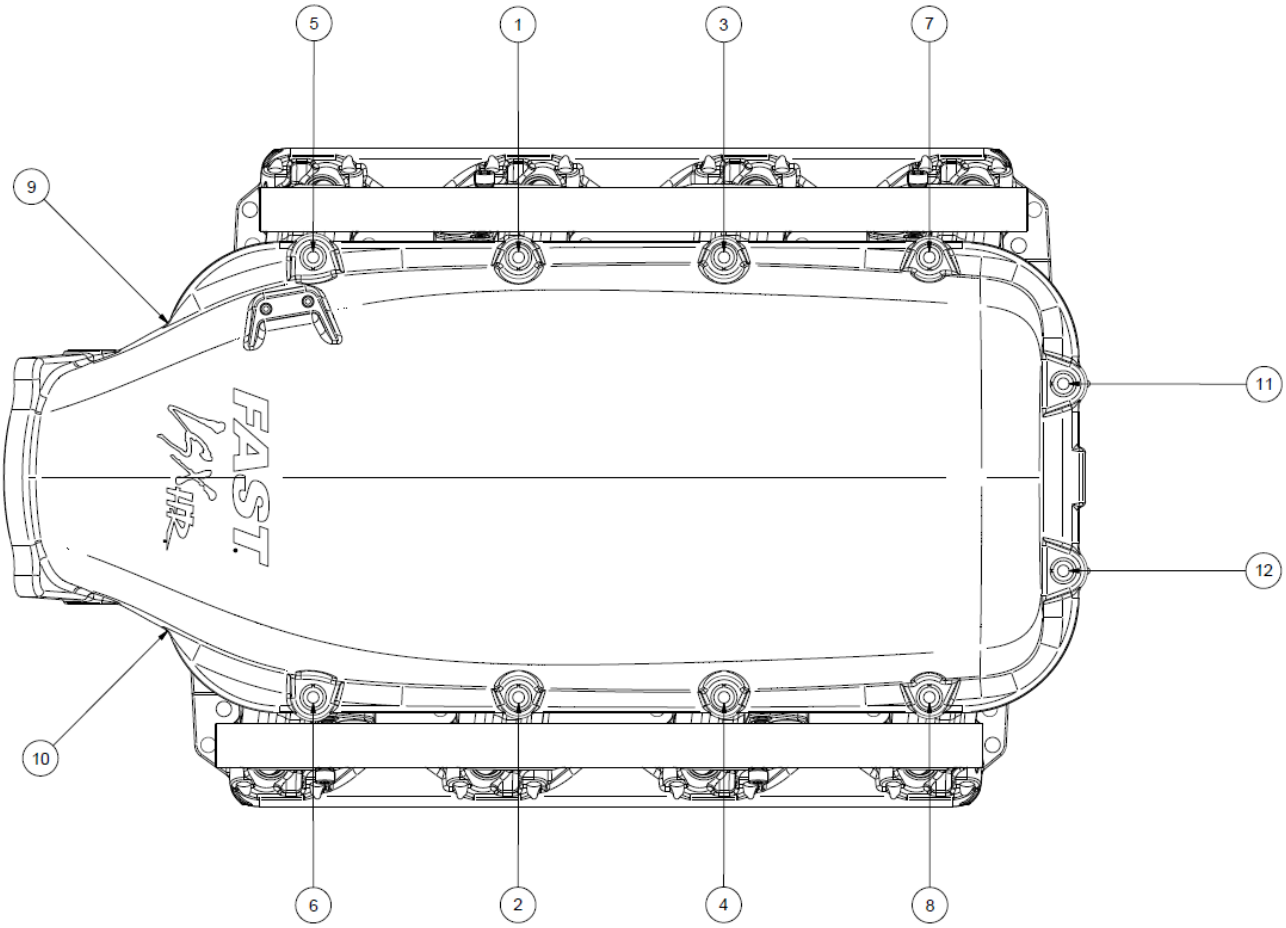

3) If already installed, remove the four fuel rail bolts (two per side).

4) Add a medium strength thread locker to the threads of the 10 intake manifold bolts.

5) Insert the 10 intake manifold bolts and set the intake manifold down on the cylinder heads. Hand hand start all the intake manifold bolts.

6) Torque all 10 intake bolts to 45 in-lbs on the first pass, then to 89 in-lbs on the second pass. Follow the torque sequence below.

CAUTION: Over torqueing the manifold will damage the manifold and cause improper sealing!

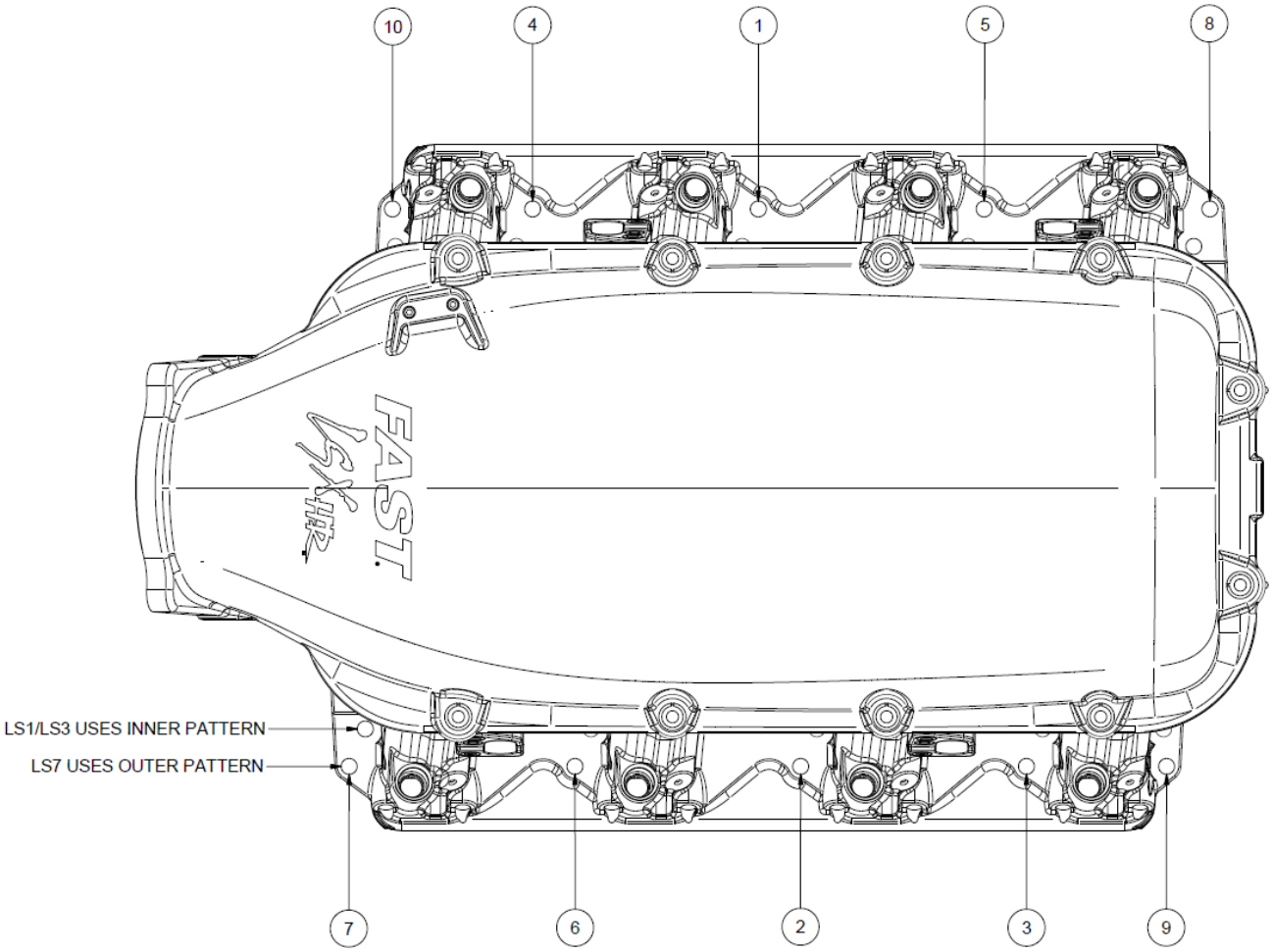

7) Install the desired injectors in the fuel rails that were removed in Step 3. Inspect the injector O-rings for damage. Lubricate all O-rings with clean engine oil.

8) Install the injectors and fuel rail assembly into the LSX_{HR}™ manifold. Carefully start all injectors in the pockets, then firmly seat one side at a time.

9) Use the diagram below to select the correct fuel rail mounting location based on the chosen injector.

   NOTE: A 1/8" spacer must be used to space the fuel rail away from the fuel rail mounting bracket when using LS2 or EV1 style injectors. Failure to do so could result in misalignment of the fuel injectors.

10) Torque the fuel rail mounting bolts to 75 in-lbs.

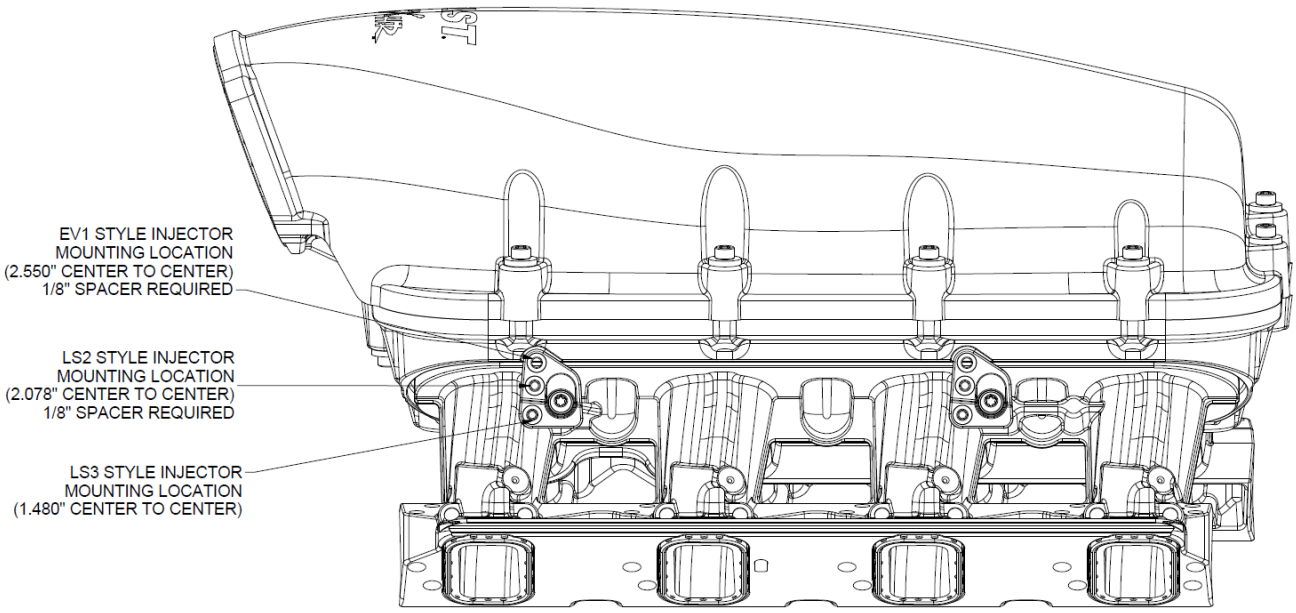

11) The LSX_{HR}™ includes four M6 x 40mm bolts to attach a drive by wire throttle body. Ensure the throttle body seal in installed and mount the desired throttle body to the intake manifold. Torque the throttle body bolts to 89 in-lbs.

12) If a cable driven throttle body is to be used, shorter M6 x 20mm bolts will be required and are included with the LSX_{HR}™.

13) The LSX_{HR}™ is supplied with a throttle cable bracket and mounting hardware for applications using a cable driven throttle body. Place the throttle cable bracket (P/N 146077TCB) on top of the manifold as shown and secure it with the two supplied Delta-PT 30x2.14x20 self-tapping screws.

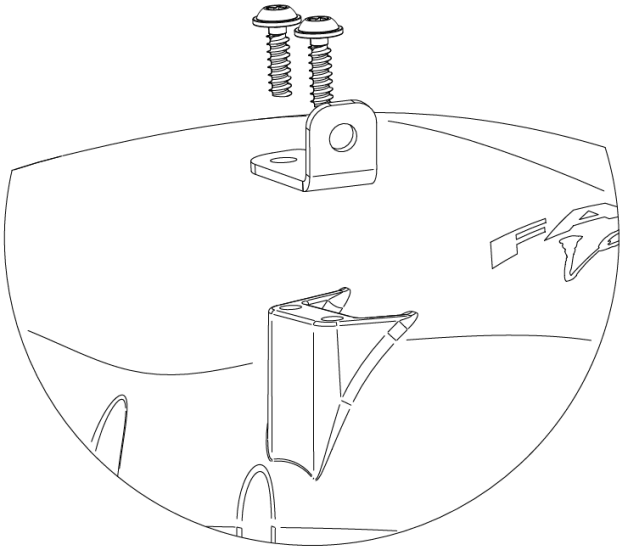

Other Features:

The LSX_{HR}™ has provisions for outboard and inboard nitrous nozzles. See the locations in the diagram below.

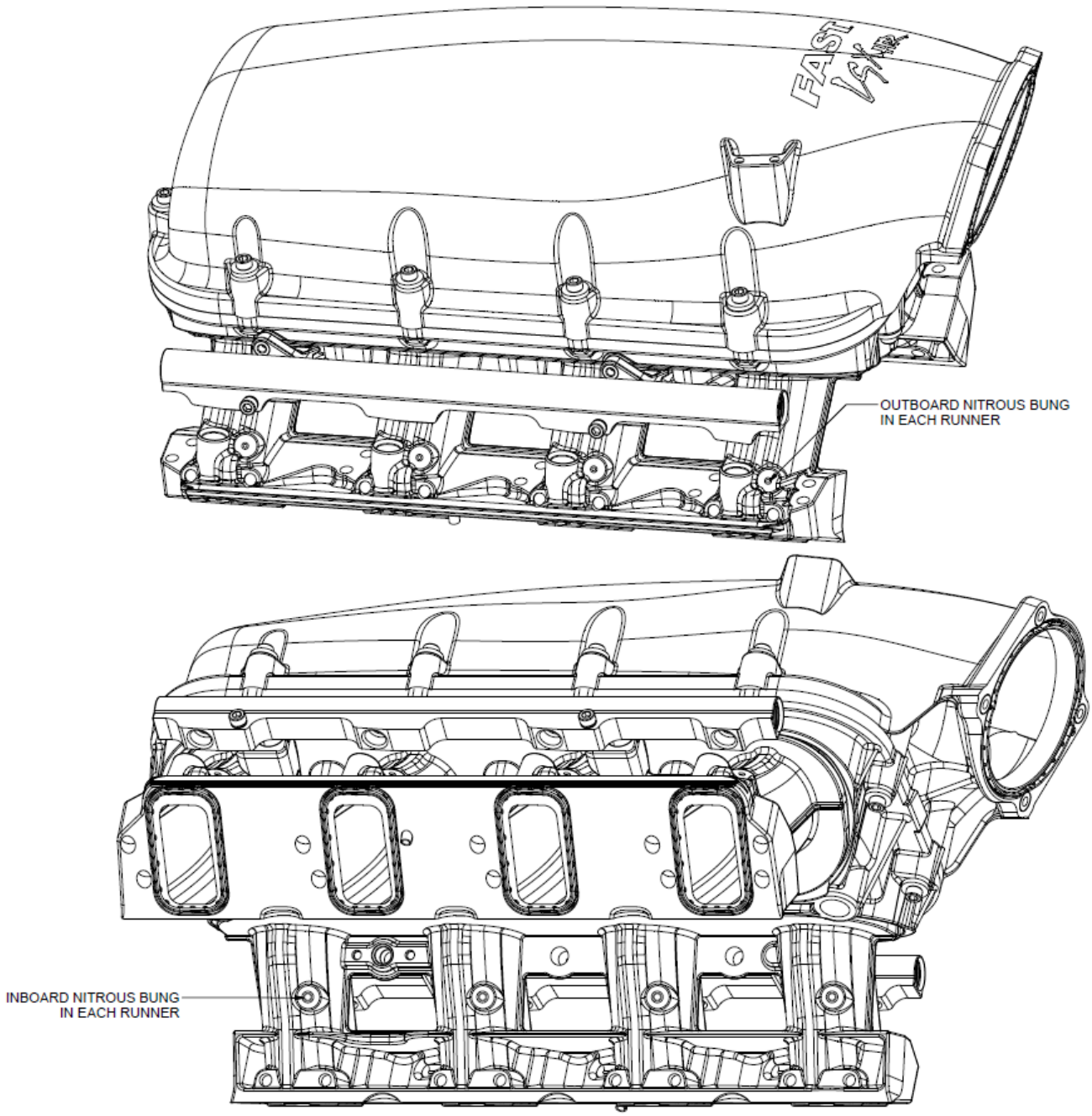

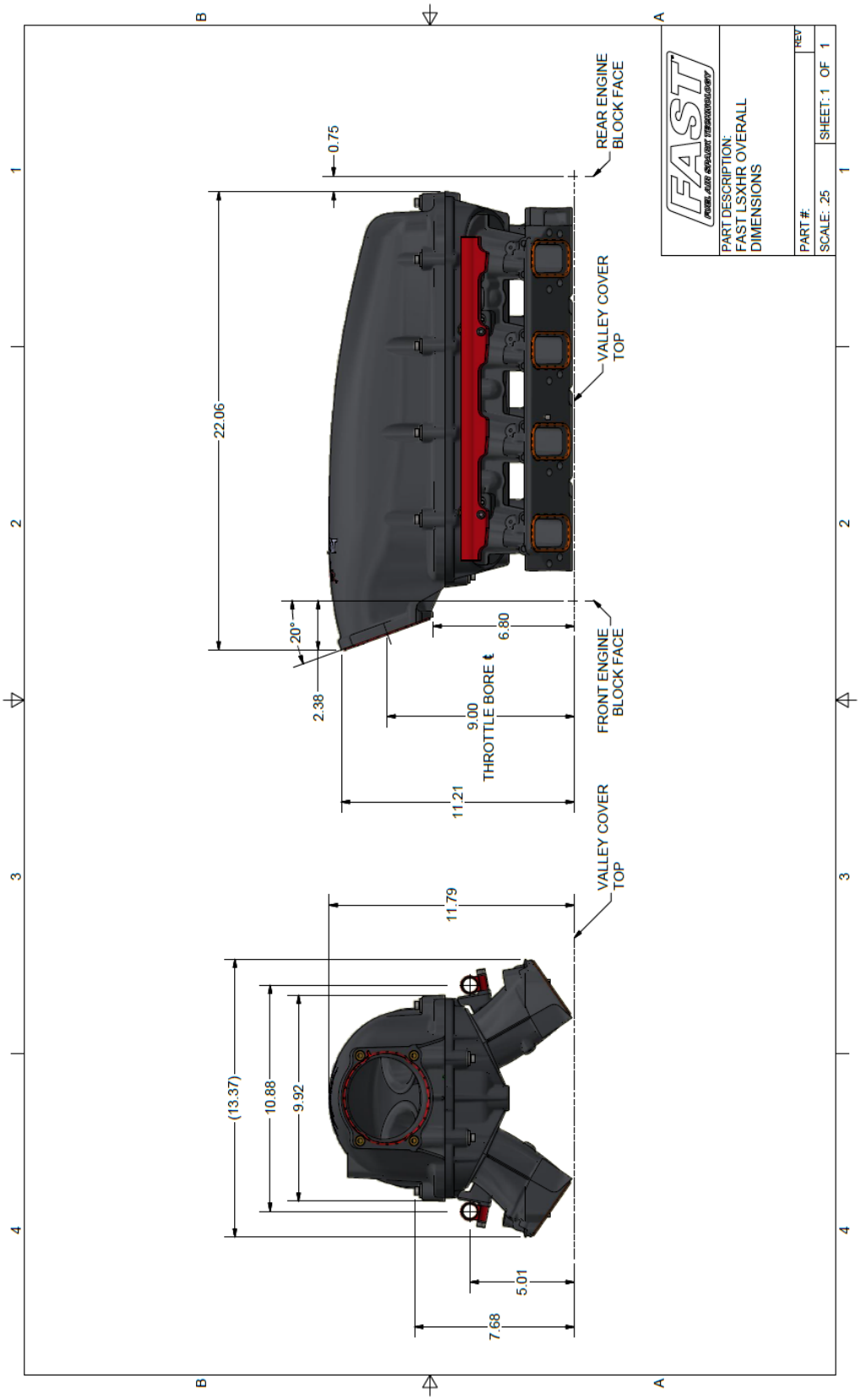
0.75
REAR ENGINE BLOCK FACE
22.06
VALLEY COVER TOP
20°
6.80
2.38
9.00
THROTTLE BORE ℄
FRONT ENGINE BLOCK FACE
11.21
VALLEY COVER TOP
11.79
(13.37)
10.88
9.92
5.01
7.68
FAST
PART DESCRIPTION:
FAST LSXHR OVERALL DIMENSIONS
PART #:
REV
SCALE: .25
SHEET: 1 OF 1

Social Media

Stay up-to-date with the latest FAST™ and COMP Performance Group™ company and product information by following us on any of our social media platforms.

facebook.com/FASTWins
twitter.com/FASTEFI
cpgnation.com

Limited Warranty

FAST, Inc. warrants that all of its products are free from defects in material and workmanship for a period of 1 year from the date of purchase. This limited warranty shall cover the original purchaser.

FAST, Inc.'s obligation under this warranty is limited to the repair or replacement of its product. To make a warranty claim, the part must be returned within 1 year of purchase to the address listed below, freight prepaid. Items covered under warranty will be returned to you freight collect. It is the responsibility of the installer to ensure that all of the components are correct before installation. We assume no liability for any errors made in tolerances, component selection, or installation.

There is absolutely no warranty on the following:

•Any parts used in racing applications.

•Any product that has been physically altered, improperly installed or maintained.

•Any product used in improper applications, abused, or not used in conjunction with the proper parts.

•Damage due to excessive manifold pressure, i.e. nitrous backfires, engine misfire, etc.

There are no implied warranties of merchantability or fitness for a particular purpose. There are no warranties, which extend beyond the description of the face hereof. FAST, Inc. will not be responsible for incidental and consequential damages, property damage or personal injury damages to the extent permitted by law. Where required by law, implied warranties or merchantability and fitness are limited to a term of 1 year from the date of original purchase.

This warranty gives you specific legal rights and you may also have other legal rights, which vary from state to state.